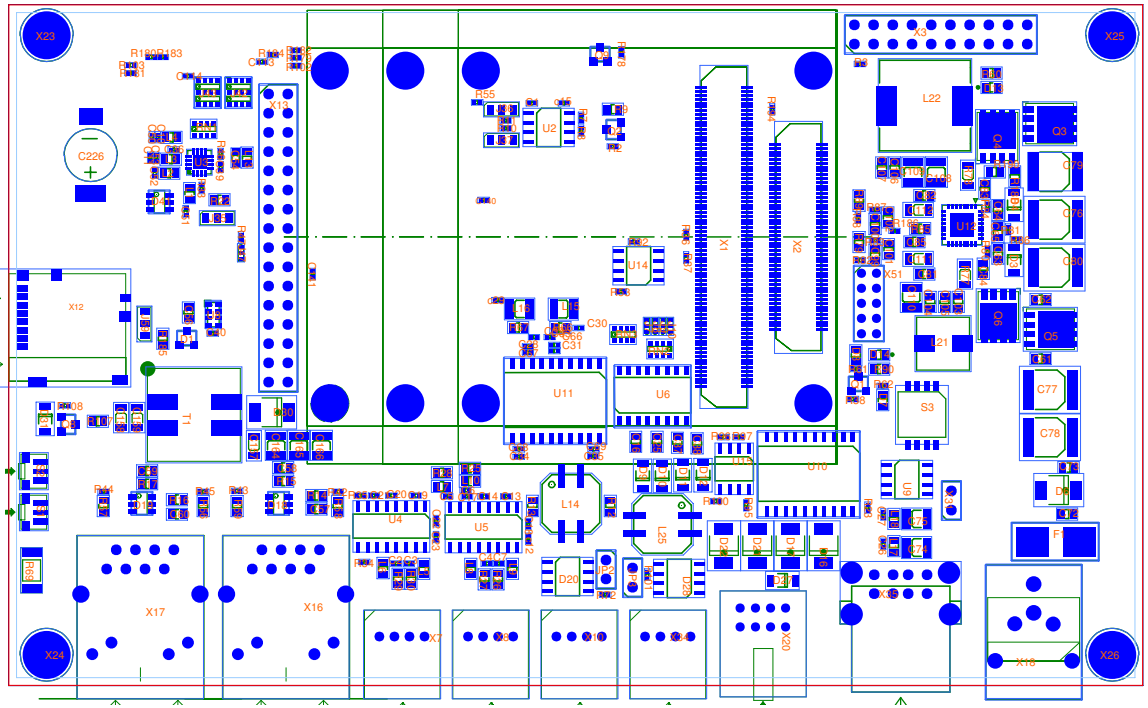
X23
X25
X24
X26
X3
X13
X12
X17
X16
X7
X20
X51
X18
C226
L22
Q3
Q5
C77
C78
S3
U11
U6
U14
U2
U4
U5
L14
L25
L21
T1
X1
X2