Confidential information and property of PHYTEC Messtechnik GmbH.
No part of these materials may be copied, used or disclosed except
with written permission of PHYTEC Messtechnik GmbH.

PBA-C-08
phyBOARD REGOR-AM335

Intellectual Property
PHYTEC GmbH Messtechnik

Copyright 2015 PHYTEC TECHNOLOGIE HOLDING AG

INFORMATION IN THIS DOCUMENT IS PROVIDED SOLELY FOR USE IN CONJUNCTION WITH THE PHYTEC PRODUCT DESCRIBED HEREIN. NO INTELLECTUAL PROPERTY RIGHTS -- EXPRESS OR IMPLIED -- ARE GRANTED THROUGH THIS DOCUMENT. LIKEWISE, PHYTEC MAKES NO EXPRESS OR IMPLIED WARRANTIES OF ANY KIND, WHETHER AS TO MANUFACTURABILITY; MERCHANTABILITY; FITNESS FOR A PARTICULAR PURPOSE; OR INFRINGEMENT OF ANY PATENT, COPYRIGHT OR OTHER INTELLECTUAL PROPERTY RIGHT. SPECIFICATIONS HEREIN ARE SUBJECT TO CHANGE AT ANY TIME WITHOUT NOTICE.

Project Overview

Confidential information and property of PHYTEC Messtechnik GmbH.
No part of these materials may be copied, used or disclosed except
with written permission of PHYTEC Messtechnik GmbH.

Page	Schematic
1	Project
2	Overview
3	phyCORE AM335 Connector
4	Power
5	Backup
6	Buttons
7	Audio
8	CAN
9	Touch
10	ETH0
11	ETH1 Phy
12	ETH1
13	RS232
14	SD0
15	USB
16	Expansion Connector
17	A/V Connector
18	Blocking

Operating Ratings

Operating Votage: 24V +/- 5%

	EUROPE	NORTH AMERIKA
Address:	PHYTEC Messtechnik GmbH Robert-Koch-Str. 39 D-55129 Mainz GERMANY	PHYTEC America LLC 203 Parfitt Way SW, Suite G100 Bainbridge Island, WA 98110 USA
Ordering Information:	+49 (6131) 9221-32 sales@phytec.de	1(800) 278-9913 sales@phytec.com
Technical Support:	+49 (6131) 9221-31 support@phytec.de	1(800) 278-9913 support@phytec.com
Fax:	+49 (6131) 9221-33	1(206) 780-9135
Web Site:	http://www.phytec.de http://www.phytec.eu	http://www.phytec.com

Intellectual Property
PHYTEC GmbH Messtechnik

phyCORE AM335x connectors

Confidential information and property of PHYTEC Messtechnik GmbH.
No part of these materials may be copied, used or disclosed except
with written permission of PHYTEC Messtechnik GmbH.

Optional Connector

X64X64

Pin	Signal
C1	X_RMII1_RXER
C2	GND
C3	X_RMII1_RXD0
C4	X_RMII1_RXD1
C5	
C6	
C7	GND
C8	X_UART3_RX_GPIO2_18
C9	X_UART3_TX_GPIO2_19
C10	X_RMII1_TXEN
C11	X_RMII1_TXD0
C12	GND
C13	X_RMII1_TXD1
C14	X_MMC2_DAT3
C15	X_RMII1_CRS
C16	X_GPMC_AD1
C17	GND
C18	X_RMII1_REFCLK
C19	
C20	
C21	
C22	GND
C23	X_GPMC_AD0
C24	X_GPMC_AD2
C25	X_GPMC_AD4
C26	X_GPMC_AD5
C27	GND
C28	X_GPMC_AD3
C29	X_GPMC_AD6
C30	X_GPMC_AD7
C31	
C32	GND
C33	X_GPMC_ADVn_ALE
C34	X_GPMC_BE0n_CLE
C35	X_GMII2_RXDV
C36	X_GMII2_TD3
C37	GND
C38	X_GMII2_CRS
C39	X_GMII2_TD2
C40	X_GMII2_TD0
C41	X_GMII2_TXCLK
C42	GND
C43	X_GMII2_RXCLK
C44	X_GMII2_RD2
C45	X_GMII2_RD1
C46	X_GMII2_RD0
C47	GND
C48	X_MMC2_CLK
C49	
C50	

Pin	Signal
D1	X_SPI_WPn
D2	X_MDIO_DATA
D3	X_MDIO_CLK
D4	GND
D5	nUSB1_OC_GPIO3_18
D6	X_MMC2_DAT0
D7	X_JTAG_TDI
D8	X_JTAG_TCK
D9	GND
D10	X_JTAG_TDO
D11	X_nJTAG_TRST
D12	X_JTAG_TMS
D13	
D14	GND
D15	X_INTR1_GPIO0_20
D16	X_INT_RTCn
D17	X_GPMC_WEn
D18	X_GPIO3_8_nPOWEROFF
D19	GND
D20	X_GPIO3_7_nPMOD_PWRFAIL
D21	X_GPMC_CS0n
D22	X_GPMC_OEn_REn
D23	X_GPMC_WAIT/_P_MII1_COL
D24	GND
D25	X_PMIC_POWER_EN
D26	DIGIN2
D27	DIGIN4
D28	DIGIN3
D29	GND
D30	DIGIN1
D31	DIGOUT4
D32	DIGOUT3
D33	X_GMII2_RXER
D34	GND
D35	X_GPIO_CKSYNC
D36	DIGOUT1
D37	X_GMII2_COL
D38	DIGOUT2
D39	GND
D40	X_GMII2_RD3
D41	X_GMII2_TD1
D42	X_GMII2_TXEN
D43	
D44	GND
D45	X_CLKOUT1
D46	X_MMC2_CMD
D47	X_AV_IN1_GPIO1_30
D48	X_GPIO1_31
D49	GND
D50	

phyCORE AM335x socket

Primary Connector

VBAT

C336 4,7uF 10V — GND

VCC5V

C337 47uF 16V — C338 47uF 16V — C412 100nF 16V — C425 1uF 16V — GND

300 mA of 1.8V from SOM — VDIG1_1P8V — R300 0

X64X64

Pin	Signal
A1	GND
A2	
A3	
A4	GND
A5	
A6	
A7	
A8	GND
A9	X_AM335_NMIn
A10	ETH0_B-/RX0-
A11	ETH0_B+/RX0+
A12	GND
A13	ETH0_A-/TX0-
A14	ETH0_A+/TX0+
A15	X_nRESET_IN
A16	GND
A17	X_ETH_LED2/_INTSELn_SPEED
A18	X_ETH_LED1/_REGOFF_LINK
A19	X_SPI0_CLK
A20	GND
A21	X_SPI0_CS0
A22	X_nSD0_CD
A23	X_I2C0_SCL
A24	X_I2C0_SDA
A25	GND
A26	X_I2S_ADC
A27	X_PWM1_OUT
A28	X_MMC2_DAT2
A29	X_MMC2_DAT1
A30	GND
A31	X_MCASP0_AHCLKX_GPIO3_21
A32	X_I2S_DAC
A33	X_I2S_FRM
A34	X_PORZ
A35	GND
A36	X_UART0_TXD
A37	X_UART0_RXD
A38	X_SPI0_MISO
A39	X_SPI0_MOSI
A40	GND
A41	X_LCD_D3
A42	X_LCD_D2
A43	X_LCD_D4
A44	X_LCD_D5
A45	GND
A46	X_LCD_D0
A47	X_LCD_D1
A48	X_LCD_D13
A49	X_LCD_HSYNC
A50	GND
A51	USB0_DM
A52	USB0_DP
A53	X_LCD_D12
A54	X_LCD_BIAS_EN
A55	GND
A56	X_LCD_D8
A57	X_LCD_D14
A58	X_LCD_D15
A59	X_LCD_D6
A60	GND
	X_LCD_D7
	X_LCD_D9
	X_LCD_D10
	X_UART2_RX_GPIO3_9

Pin	Signal
B1	
B2	
B3	
B4	GND
B5	
B6	VAUX2_3P3V
B7	GND
B8	X_UART1_CTS
B9	X_UART1_RTS
B10	X_UART1_TXD
B11	X_UART1_RXD
B12	GND
B13	nRESET_OUT
B14	X_PB_POWER
B15	nUSB0_OC_GPIO3_19
B16	X_I2S_CLK
B17	GND
B18	USB1_DP
B19	USB1_DM
B20	GND
B21	X_USB1_DRVVBUS
B22	USB1_VBUS
B23	X_USB1_ID
B24	X_USB1_CE
B25	GND
B26	X_GPIO0_7
B27	GND
B28	X_AIN7
B29	X_AIN6
B30	GND
B31	X_AIN5
B32	X_AIN4
B33	GND
B34	X_AIN3
B35	X_AIN2
B36	GND
B37	X_AIN1
B38	X_AIN0
B39	X_AM335_EXT_WAKEUP
B40	GND
B41	USB0_VBUS
B42	X_USB0_DRVVBUS
B43	USB0_ID
B44	X_USB0_CE
B45	GND
B46	X_LCD_PCLK
B47	X_LCD_VSYNC
B48	GND
B49	X_LCD_D11
B50	X_CAN1_RX
B51	X_CAN1_TX
B52	GND
B53	RN15 1–8 22 X_SD0_CLK
B54	RN15 2–7 22 X_SD0_CMD
B55	RN15 3–6 22 X_SD0_D0
B56	RN15 4–5 22 X_SD0_D1
B57	GND
B58	R266 22 X_SD0_D2
B59	R267 22 X_SD0_D3
B60	X_UART2_TX_GPIO3_10

phyCORE AM335x socket

X64
HOLE1 1
HOLE2 2
HOLE3 3
HOLE4 4
phyCORE AM335x socket
Mounting holes for SOM.
GND

Intellectual Property
PHYTEC GmbH Messtechnik

PHYTEC	PHYTEC Messtechnik GmbH Robert-Koch-Strasse 39 D-55129 Mainz
Project: PBA-C-08	Department : F&E Author: T. Jacobus
12.08.2015 / PCB-No.: 1447.1	Revision : 001 / Sheet 3 of 24

Confidential information and property of PHYTEC Messtechnik GmbH.
No part of these materials may be copied, used or disclosed except
with written permission of PHYTEC Messtechnik GmbH.

5V/3V3 Regulator 3A/1A

Operating Votage: 12-24V +/- 10%

5V/3A maximum

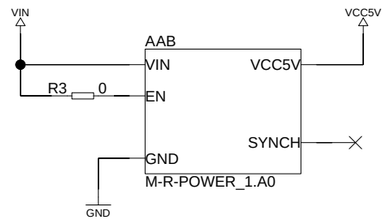

3.3V/1A maximum

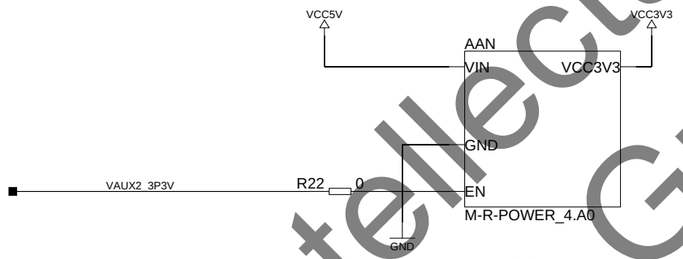

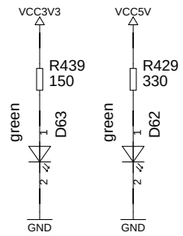

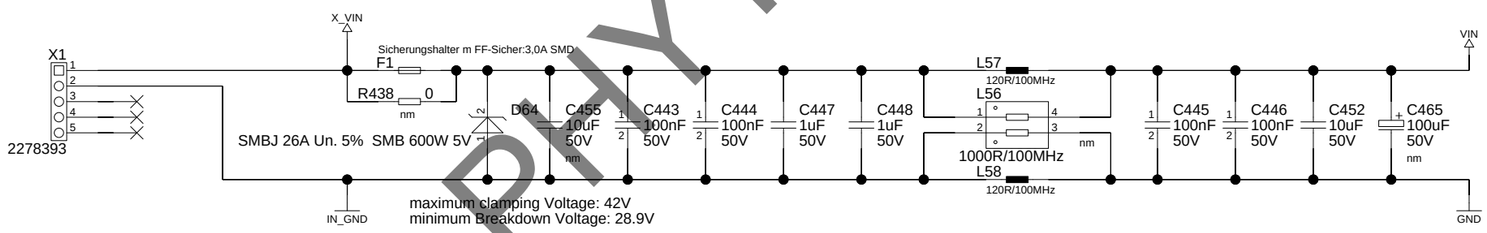

Intellectual Property
PHYTEC GmbH Messtechnik

PHYTEC	PHYTEC Messtechnik GmbH Robert-Koch-Strasse 39 D-55129 Mainz
Project: PBA-C-08	Department : F&E Author: T. Jacobus
12.08.2015 / PCB-No.: 1447.1	Revision : 001 / Sheet 4 of 24

M-R-POWER_4

Confidential information and property of PHYTEC Messtechnik GmbH.
No part of these materials may be copied, used or disclosed except
with written permission of PHYTEC Messtechnik GmbH.

Regulator 3V3/1A

Operating Votage: 5V +/- 10%

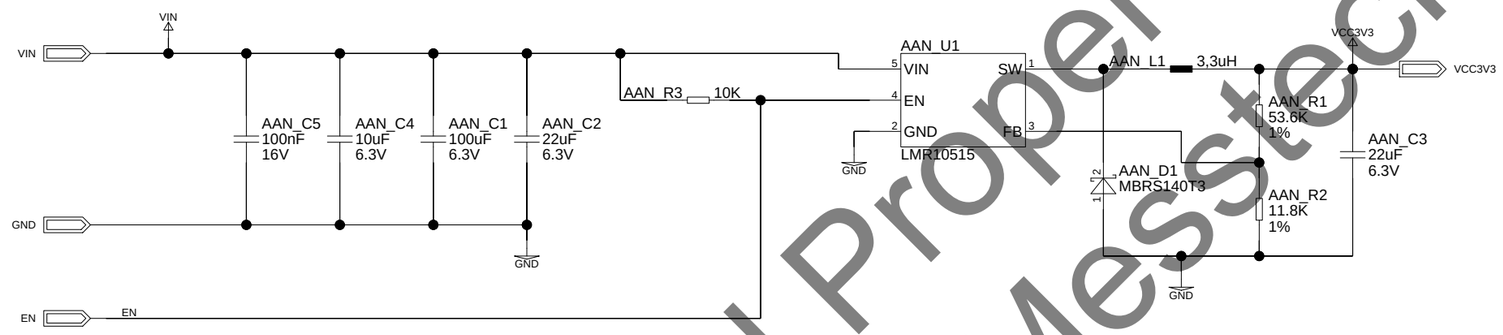

3.3V/1A maximum

Intellectual Property
PHYTEC GmbH Messtechnik

PHYTEC		PHYTEC Messtechnik GmbH Robert-Koch-Strasse 39 D-55129 Mainz	
Block Name: M-R-POWER_4	Block Prefix: AN	Department : F&E Author: T. Jacobus	
16.04.2015	Makro: M-R-POWER_4.A0	Revision : 001	Sheet 5 of 24

M-R-POWER_1

Confidential information and property of PHYTEC Messtechnik GmbH.
No part of these materials may be copied, used or disclosed except
with written permission of PHYTEC Messtechnik GmbH.

5V Regulator 3A

Operating Votage: 12-24V +/- 10%

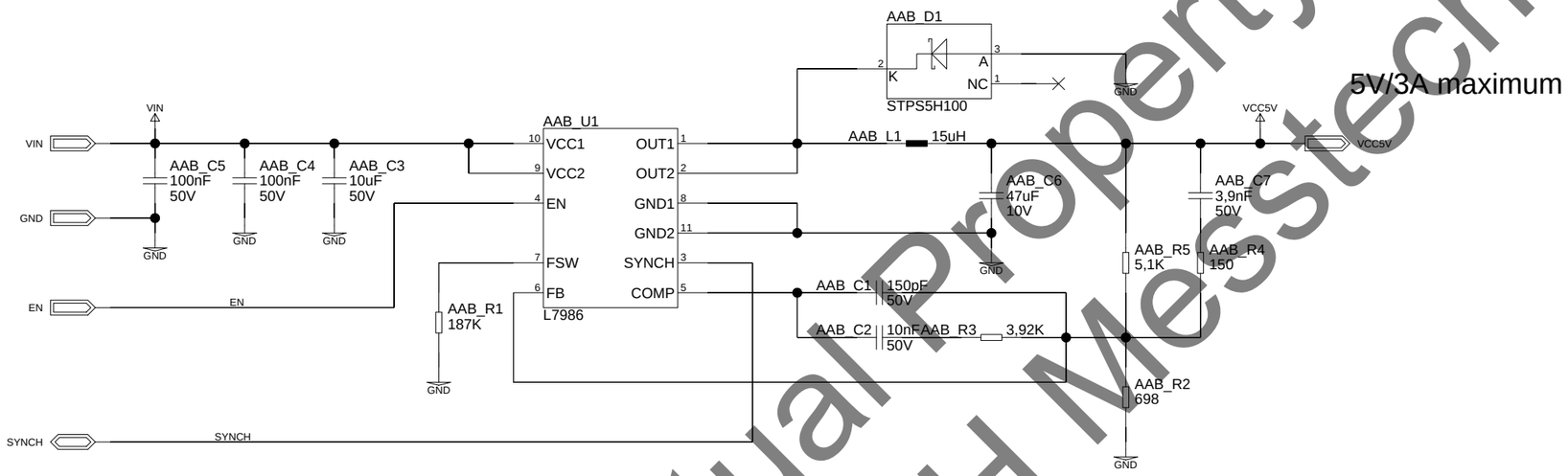

Intellectual Property
PHYTEC GmbH Messtechnik

PHYTEC		PHYTEC Messtechnik GmbH Robert-Koch-Strasse 39 D-55129 Mainz
Block Name: M-R-POWER_1	Block Prefix: AB	Department : F&E Author: T. Jacobus
16.04.2015	Makro: M-R-POWER_1.A0	Revision : 001 — Sheet 6 of 24

Power

Confidential information and property of PHYTEC Messtechnik GmbH.
No part of these materials may be copied, used or disclosed except
with written permission of PHYTEC Messtechnik GmbH.

Intellectual Property
PHYTEC GmbH Messtechnik

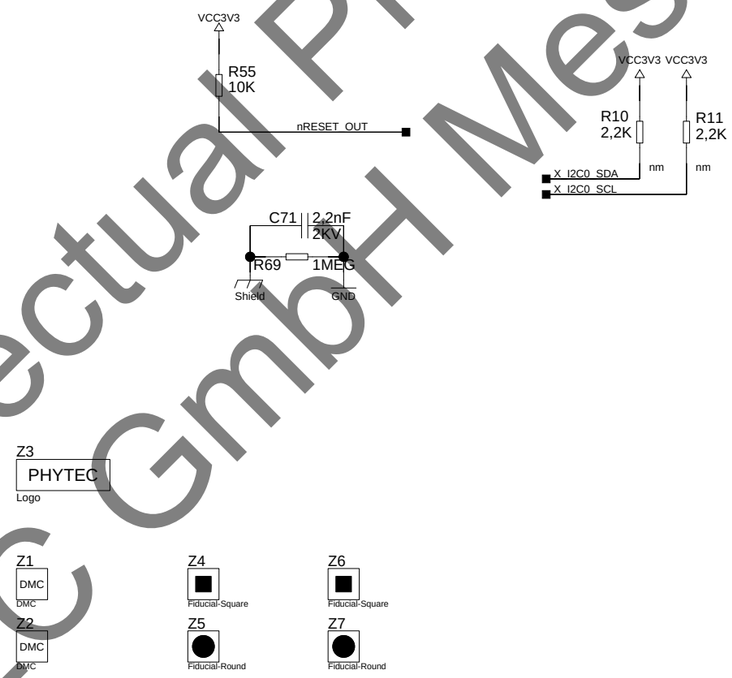

PHYTEC		PHYTEC Messtechnik GmbH Robert-Koch-Strasse 39 D-55129 Mainz	
Project: PBA-C-08		Department : F&E Author: T. Jacobus	
12.08.2015	PCB-No.: 1447.1	Revision : 001	Sheet 7 of 24

Backup

Confidential information and property of PHYTEC Messtechnik GmbH.
No part of these materials may be copied, used or disclosed except
with written permission of PHYTEC Messtechnik GmbH.

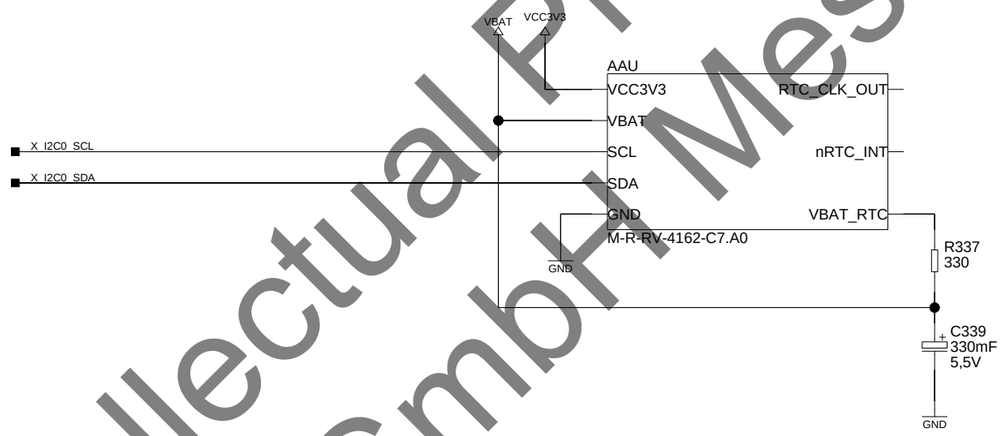

Intellectual Property
PHYTEC GmbH Messtechnik

PHYTEC		PHYTEC Messtechnik GmbH Robert-Koch-Strasse 39 D-55129 Mainz	
Project: PBA-C-08		Department : F&E Author: T. Jacobus	
12.08.2015	PCB-No.: 1447.1	Revision : 001	Sheet 8 of 24

M-R-RV-4162-C7

Confidential information and property of PHYTEC Messtechnik GmbH.
No part of these materials may be copied, used or disclosed except
with written permission of PHYTEC Messtechnik GmbH.

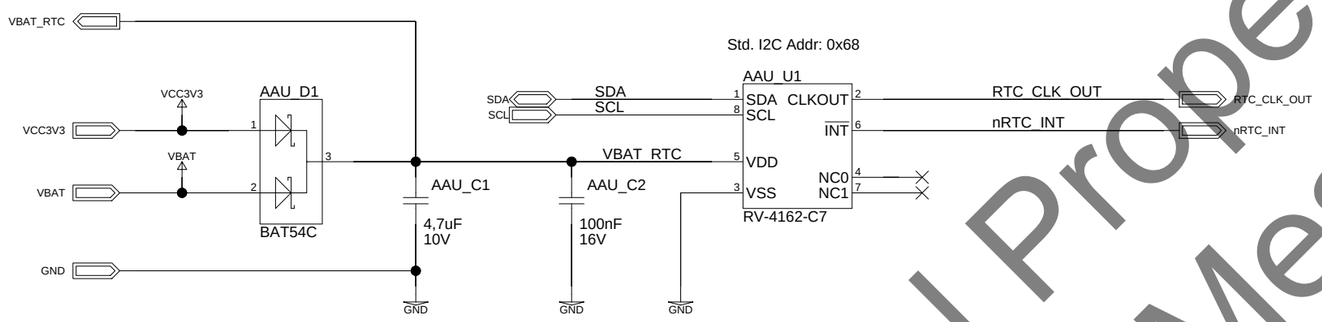

Intellectual Property
PHYTEC GmbH Messtechnik

PHYTEC		PHYTEC Messtechnik GmbH Robert-Koch-Strasse 39 D-55129 Mainz	
Block Name: M-R-RV-4162-C7	Block Prefix: AU	Department : F&E Author: T. Jacobus	
16.04.2015	Makro: M-R-RV-4162-C7.A0	Revision : 001	Sheet 9 of 24

Button/Switch

Confidential information and property of PHYTEC Messtechnik GmbH.
No part of these materials may be copied, used or disclosed except
with written permission of PHYTEC Messtechnik GmbH.

Reset Button

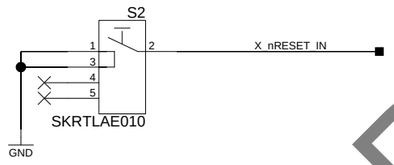

Boot Switch

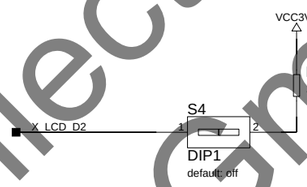

Switch between Boot mode 1 and Boot mode 2:
Boot mode 1 (S4=OFF): SYSBOOT[4:0]=10011b: NAND, NANDI2C, MMC0, UART
Boot mode 2 (S4=ON) : SYSBOOT[4:0]=10111b: MMC0, SPI0, UART0, USB

Intellectual Property
PHYTEC GmbH Messtechnik

PHYTEC		PHYTEC Messtechnik GmbH Robert-Koch-Strasse 39 D-55129 Mainz	
Project: PBA-C-08		Department : F&E Author: T. Jacobus	
12.08.2015	PCB-No.: 1447.1	Revision : 001	Sheet 10 of 24

Confidential information and property of PHYTEC Messtechnik GmbH.
No part of these materials may be copied, used or disclosed except
with written permission of PHYTEC Messtechnik GmbH.

CAN

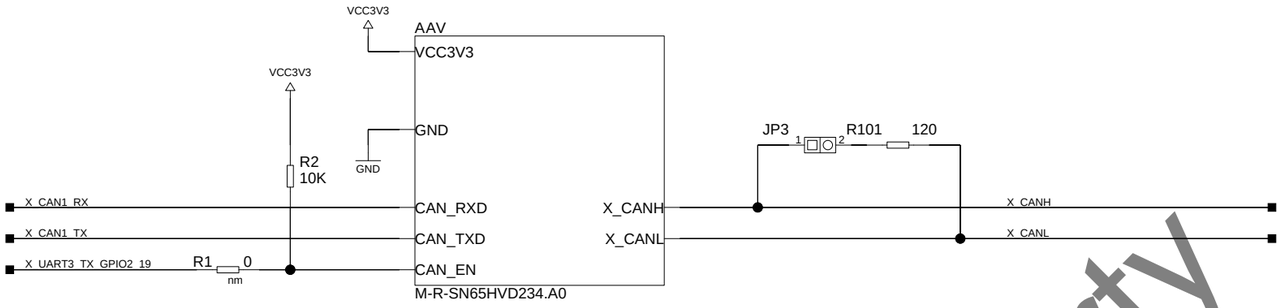

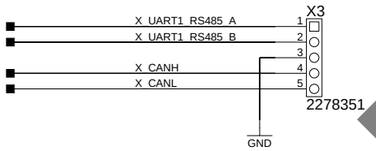

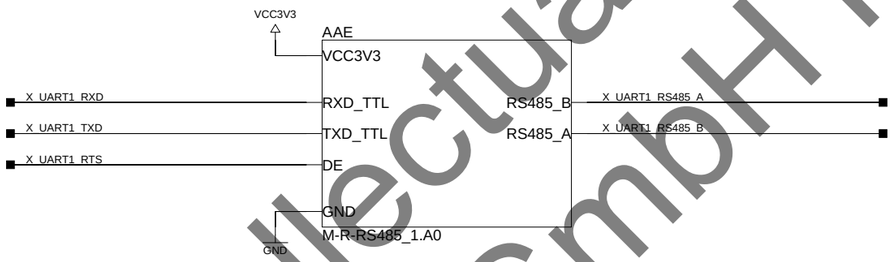

Intellectual Property
PHYTEC GmbH Messtechnik

PHYTEC	PHYTEC Messtechnik GmbH Robert-Koch-Strasse 39 D-55129 Mainz
Project: PBA-C-08	Department : F&E Author: T. Jacobus
12.08.2015 / PCB-No.: 1447.1	Revision : 001 / Sheet 11 of 24

M-R-SN65HVD234

Confidential information and property of PHYTEC Messtechnik GmbH.
No part of these materials may be copied, used or disclosed except
with written permission of PHYTEC Messtechnik GmbH.

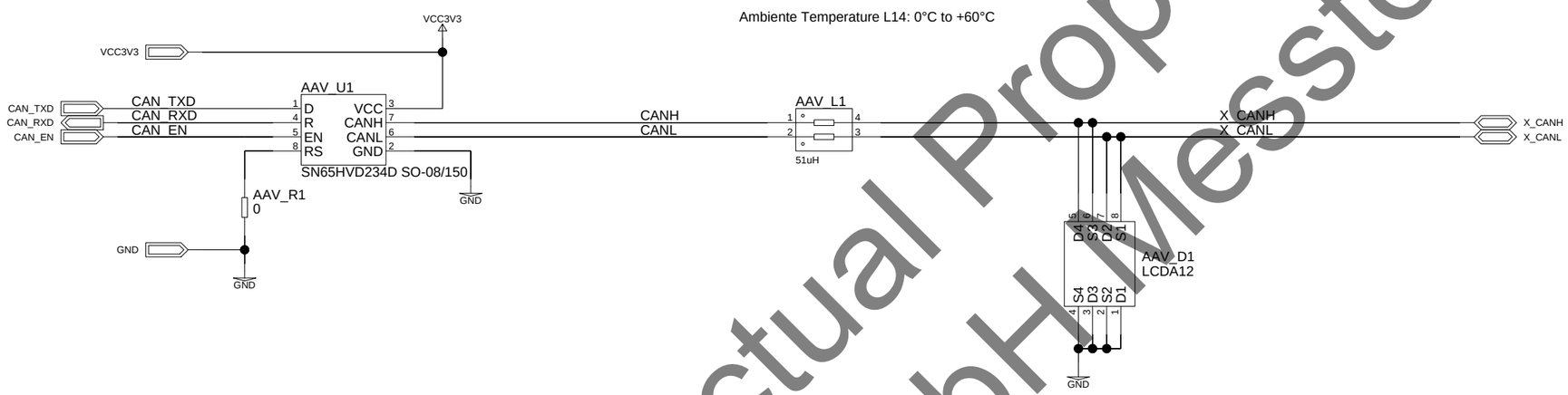

Intellectual Property
PHYTEC GmbH Messtechnik

PHYTEC		PHYTEC Messtechnik GmbH Robert-Koch-Strasse 39 D-55129 Mainz	
Block Name: M-R-SN65HVD234	Block Prefix: AV	Department : F&E Author: T. Jacobus	
16.04.2015	Makro: M-R-SN65HVD234.A0	Revision : 001	Sheet 12 of 24

M-R-RS485_1

Confidential information and property of PHYTEC Messtechnik GmbH.
No part of these materials may be copied, used or disclosed except
with written permission of PHYTEC Messtechnik GmbH.

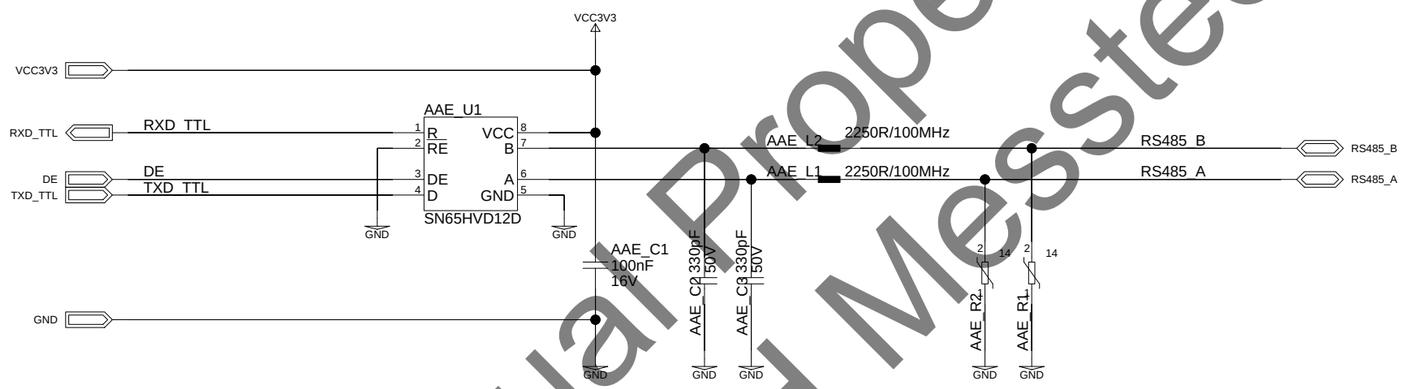

Intellectual Property
PHYTEC GmbH Messtechnik

PHYTEC		PHYTEC Messtechnik GmbH Robert-Koch-Strasse 39 D-55129 Mainz
Block Name: M-R-RS485_1	Block Prefix: AE	Department : F&E Author: T. Jacobus
16.04.2015	Makro: M-R-RS485_1.A0	Revision : 001 — Sheet 13 of 24

Confidential information and property of PHYTEC Messtechnik GmbH.
No part of these materials may be copied, used or disclosed except
with written permission of PHYTEC Messtechnik GmbH.

Ethernet0 10/100Mbit

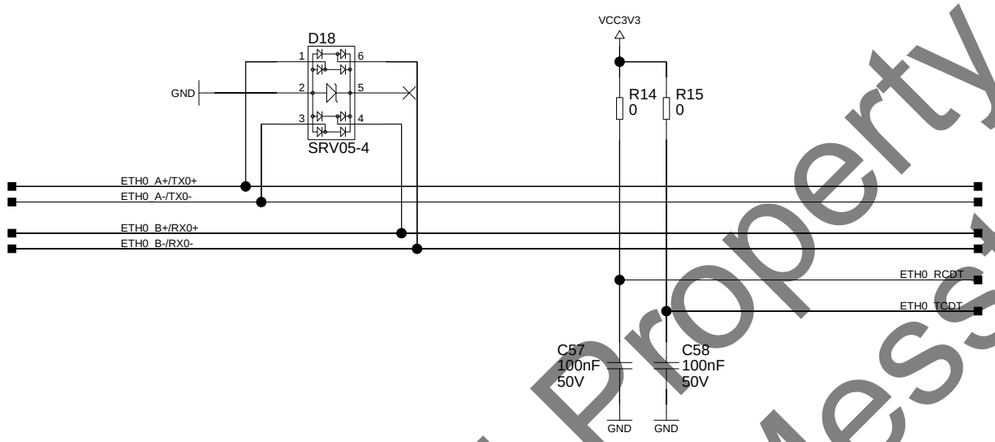

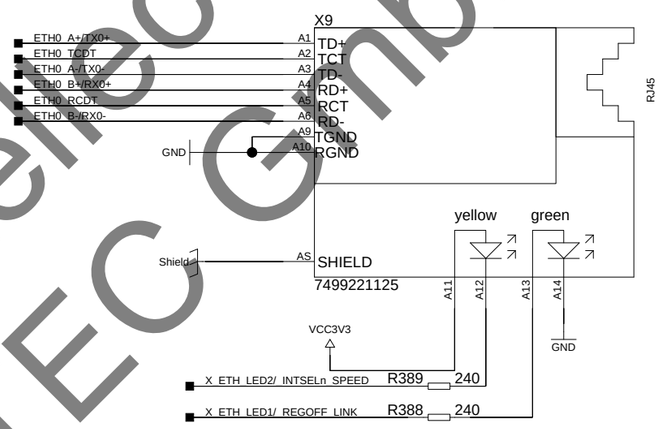

Intellectual Property
PHYTEC GmbH Messtechnik

PHYTEC	PHYTEC Messtechnik GmbH Robert-Koch-Strasse 39 D-55129 Mainz
Project: PBA-C-08	Department : F&E Author: T. Jacobus
12.08.2015 / PCB-No.: 1447.1	Revision : 001 / Sheet 14 of 24

ETH1 Phy

Confidential information and property of PHYTEC Messtechnik GmbH.
No part of these materials may be copied, used or disclosed except
with written permission of PHYTEC Messtechnik GmbH.

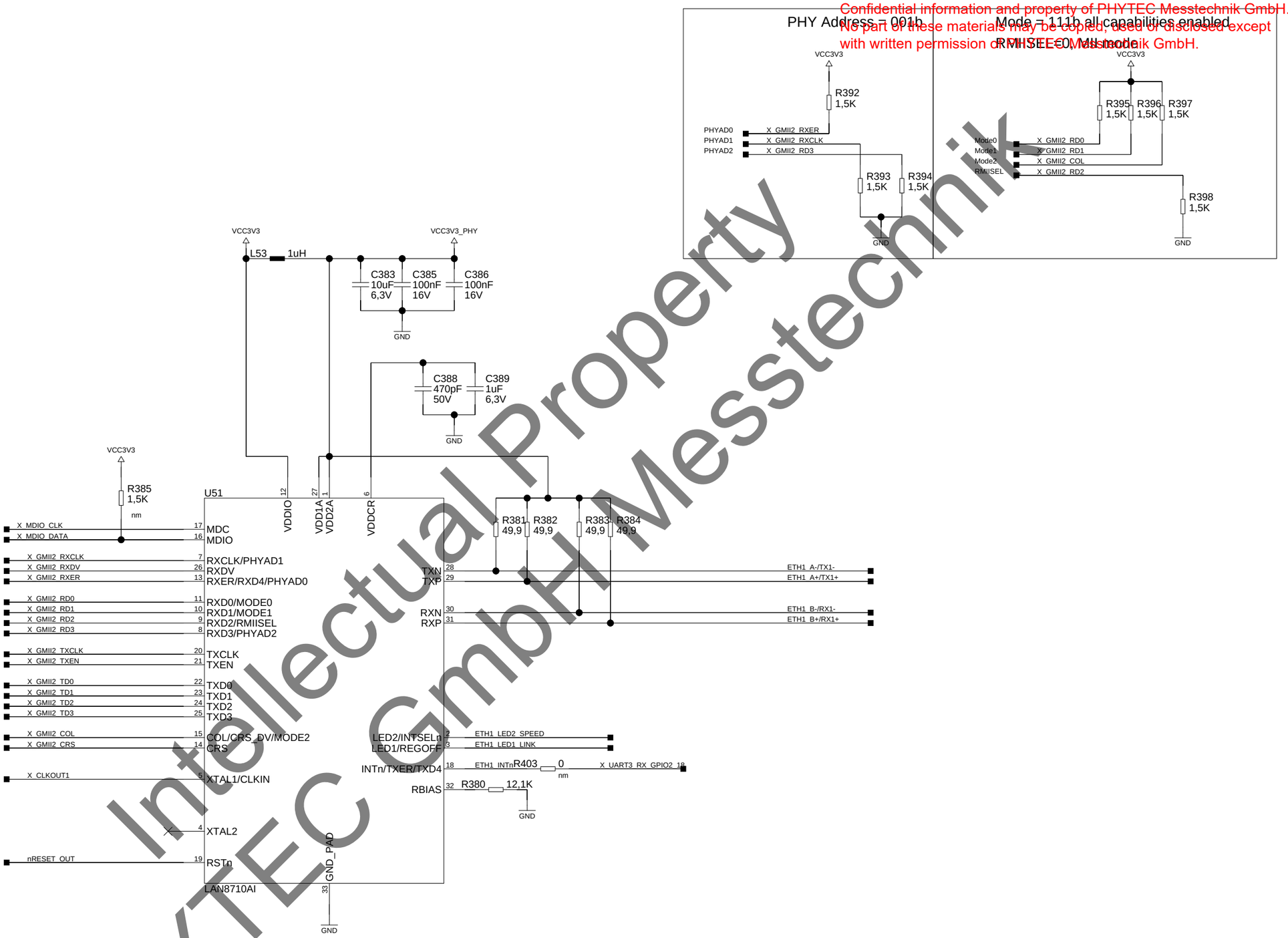

Intellectual Property
PHYTEC GmbH Messtechnik

PHYTEC		PHYTEC Messtechnik GmbH Robert-Koch-Strasse 39 D-55129 Mainz	
Project: PBA-C-08		Department : F&E Author: T. Jacobus	
12.08.2015	PCB-No.: 1447.1	Revision : 001	Sheet 15 of 24

Ethernet1 10/100Mbit

Confidential information and property of PHYTEC Messtechnik GmbH.
No part of these materials may be copied, used or disclosed except
with written permission of PHYTEC Messtechnik GmbH.

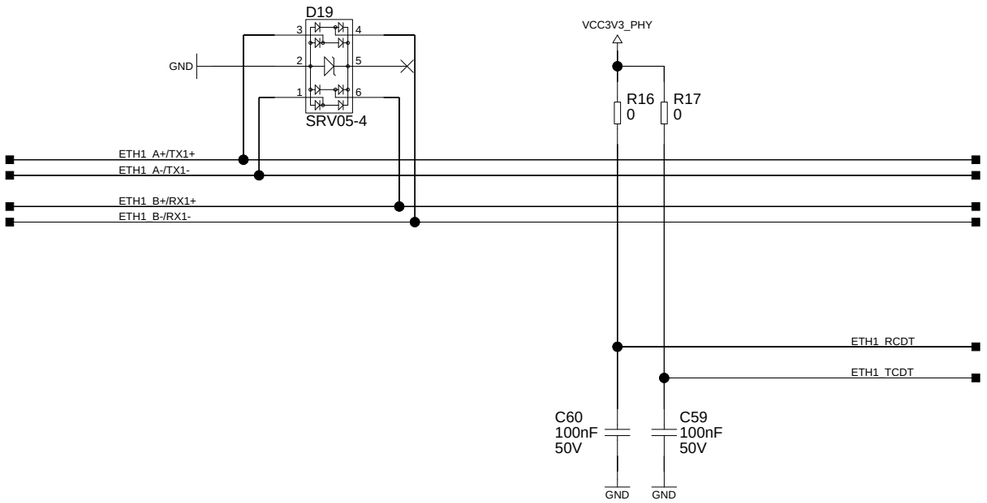

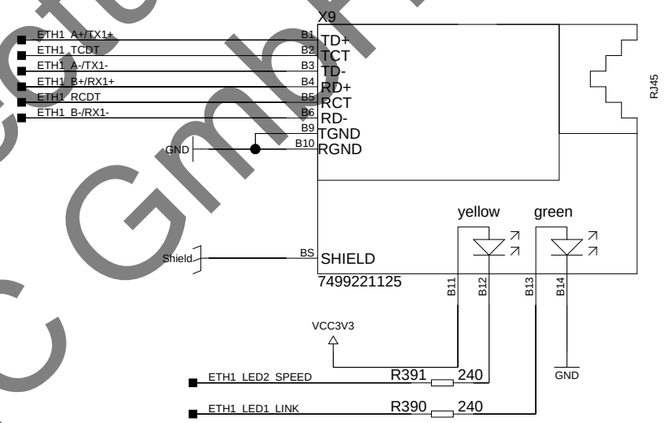

Intellectual Property
PHYTEC GmbH Messtechnik

PHYTEC	PHYTEC Messtechnik GmbH Robert-Koch-Strasse 39 D-55129 Mainz		
Project: PBA-C-08		Department : F&E Author: T. Jacobus	
12.08.2015	PCB-No.: 1447.1	Revision : 001	Sheet 16 of 24

UART1_RS232

Confidential information and property of PHYTEC Messtechnik GmbH.
No part of these materials may be copied, used or disclosed except
with written permission of PHYTEC Messtechnik GmbH.

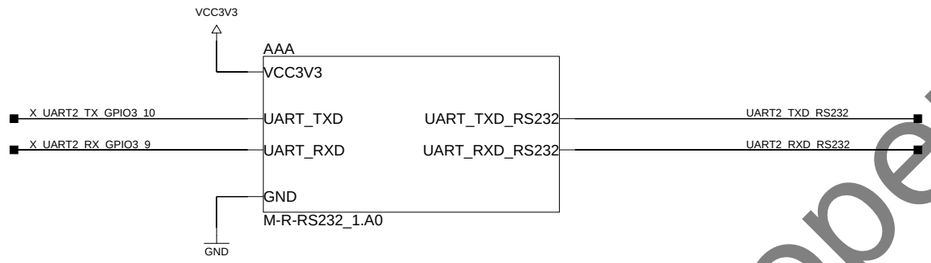

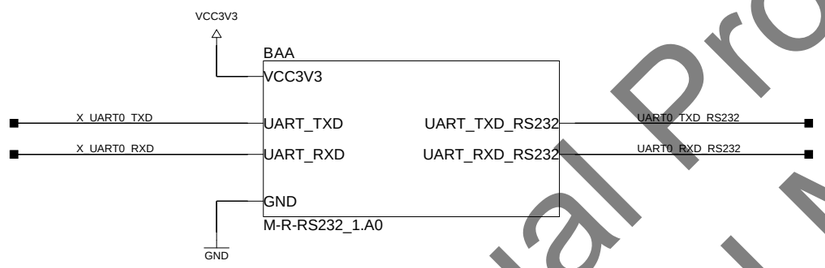

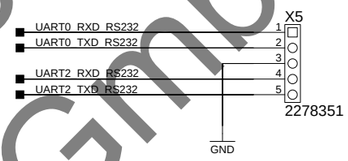

Intellectual Property
PHYTEC GmbH Messtechnik

PHYTEC		PHYTEC Messtechnik GmbH Robert-Koch-Strasse 39 D-55129 Mainz	
Project: PBA-C-08		Department : F&E Author: T. Jacobus	
12.08.2015	PCB-No.: 1447.1	Revision : 001	Sheet 17 of 24

M-R-RS232_1

Confidential information and property of PHYTEC Messtechnik GmbH.
No part of these materials may be copied, used or disclosed except
with written permission of PHYTEC Messtechnik GmbH.

Serial Transceiver 2 lanes

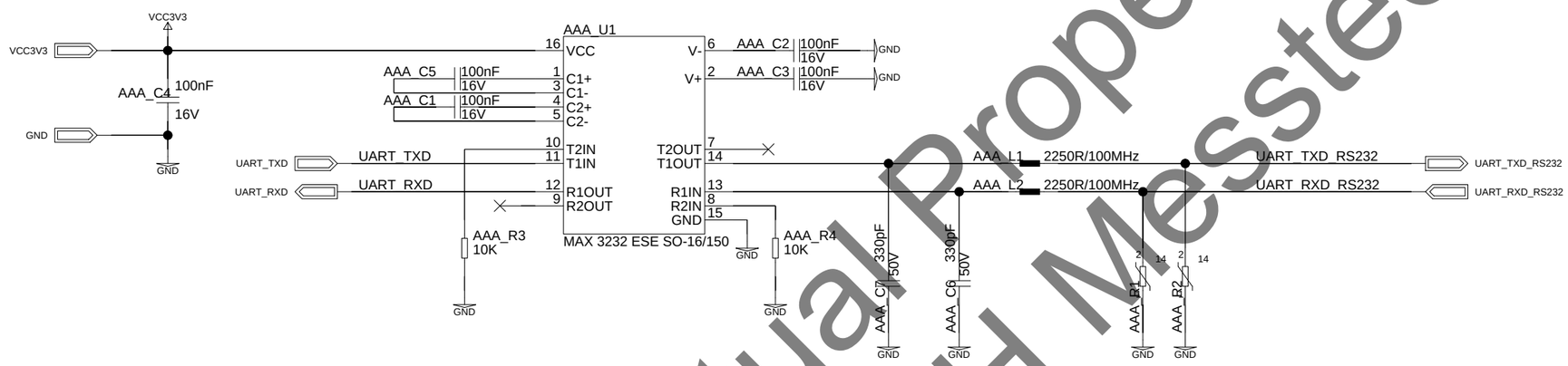

Intellectual Property
PHYTEC GmbH Messtechnik

PHYTEC		PHYTEC Messtechnik GmbH Robert-Koch-Strasse 39 D-55129 Mainz
Block Name: M-R-RS232_1	Block Prefix: AA	Department : F&E Author: T. Jacobus
16.04.2015	Makro: M-R-RS232_1.A0	Revision : 001 — Sheet 18 of 24

M-R-RS232_1

Confidential information and property of PHYTEC Messtechnik GmbH.
No part of these materials may be copied, used or disclosed except
with written permission of PHYTEC Messtechnik GmbH.

Serial Transceiver 2 lanes

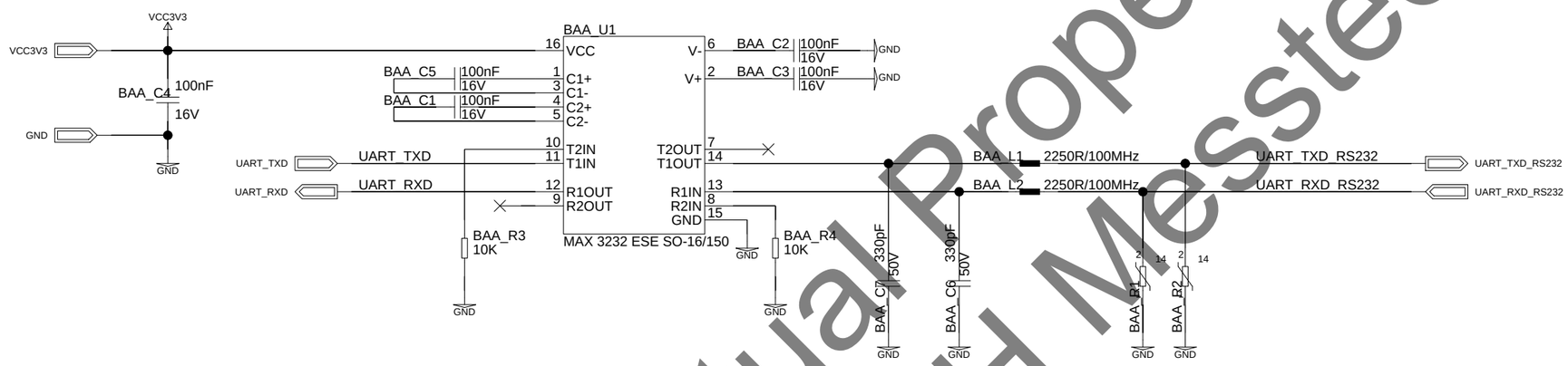

Intellectual Property
PHYTEC GmbH Messtechnik

PHYTEC		PHYTEC Messtechnik GmbH Robert-Koch-Strasse 39 D-55129 Mainz
Block Name: M-R-RS232_1	Block Prefix: AA	Department : F&E Author: T. Jacobus
16.04.2015	Makro: M-R-RS232_1.A0	Revision : 001 — Sheet 19 of 24

Confidential information and property of PHYTEC Messtechnik GmbH.
No part of these materials may be copied, used or disclosed except
with written permission of PHYTEC Messtechnik GmbH.

SD0 Card

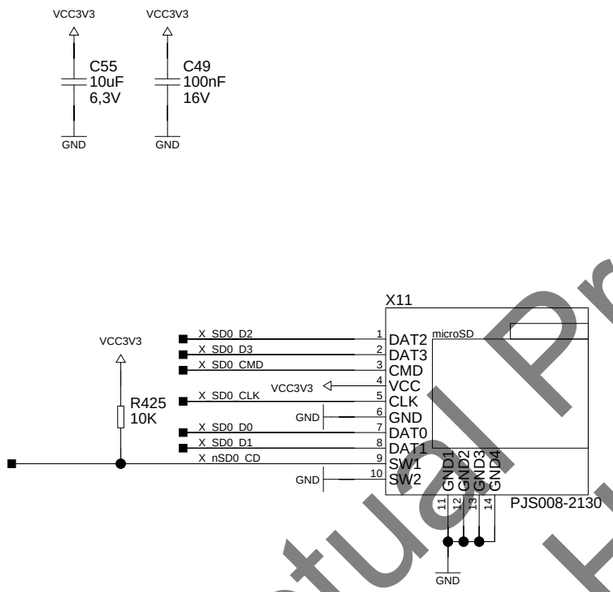

Intellectual Property
PHYTEC GmbH Messtechnik

PHYTEC		PHYTEC Messtechnik GmbH Robert-Koch-Strasse 39 D-55129 Mainz	
Project: PBA-C-08		Department : F&E Author: T. Jacobus	
12.08.2015	PCB-No.: 1447.1	Revision : 001	Sheet 20 of 24

Confidential information and property of PHYTEC Messtechnik GmbH.
No part of these materials may be copied, used or disclosed except
with written permission of PHYTEC Messtechnik GmbH.

USB

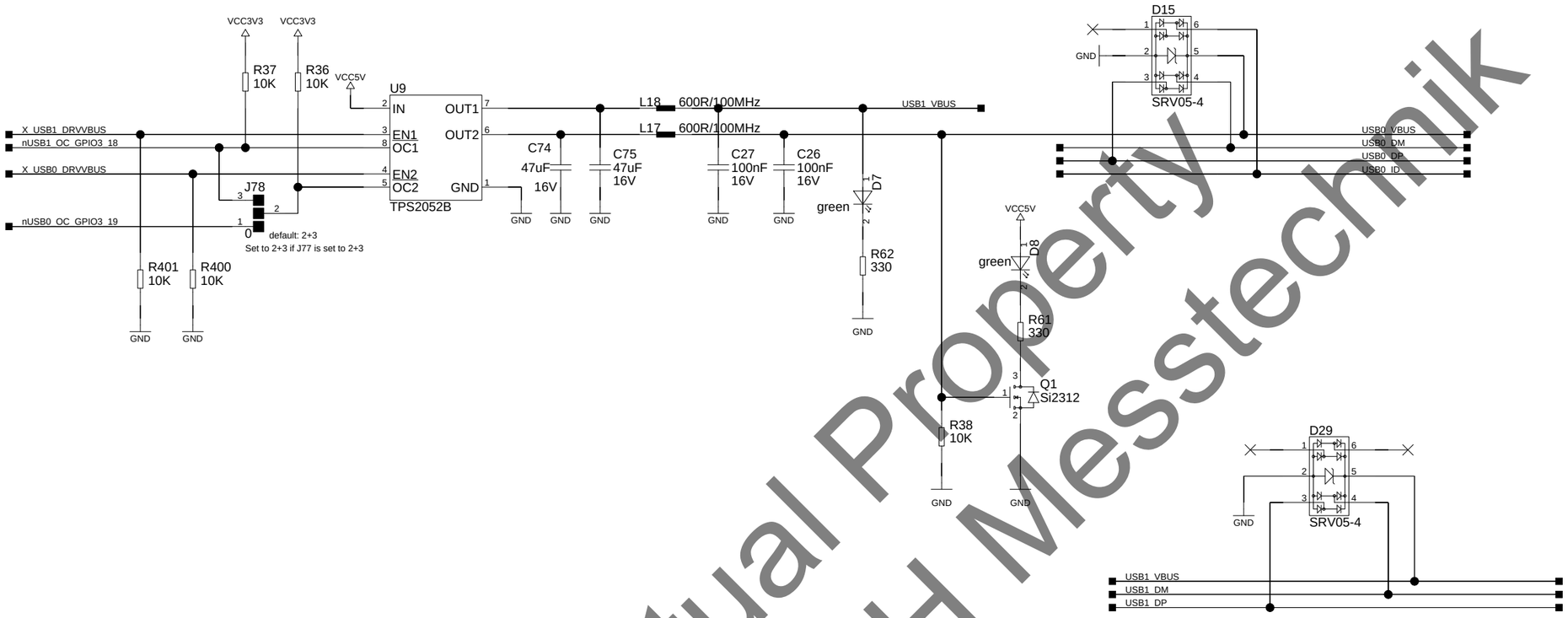

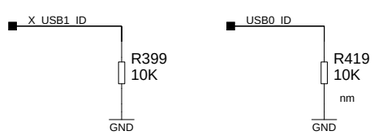

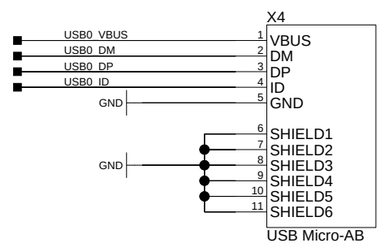

USB-OTG

Intellectual Property
PHYTEC GmbH Messtechnik

PHYTEC	PHYTEC Messtechnik GmbH Robert-Koch-Strasse 39 D-55129 Mainz
Project: PBA-C-08	Department : F&E Author: T. Jacobus
12.08.2015 / PCB-No.: 1447.1	Revision : 001 / Sheet 21 of 24

EMC Capacitors

Confidential information and property of PHYTEC Messtechnik GmbH.
No part of these materials may be copied, used or disclosed except
with written permission of PHYTEC Messtechnik GmbH.

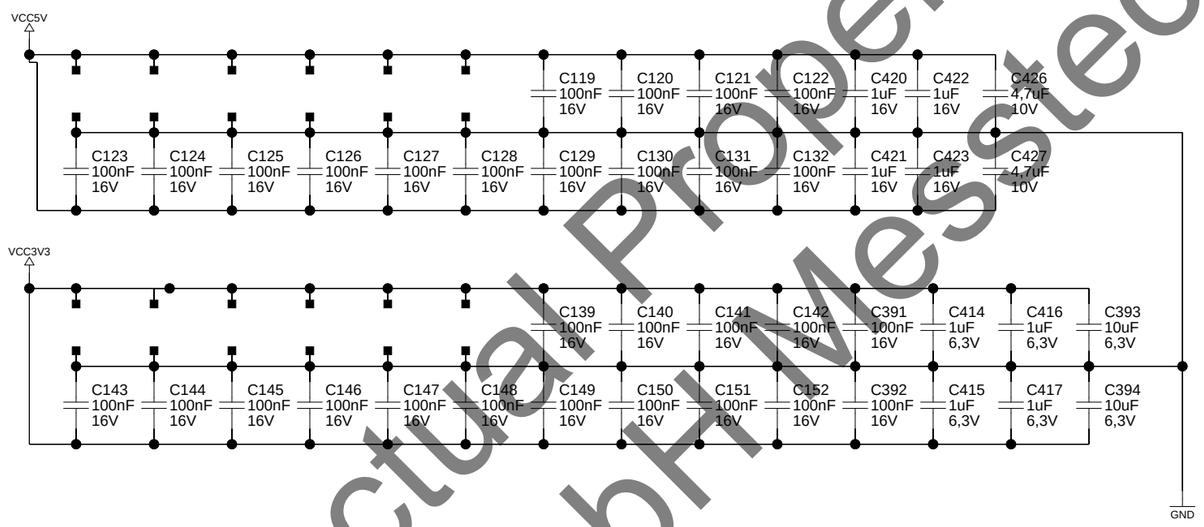

Intellectual Property
PHYTEC GmbH Messtechnik

PHYTEC	PHYTEC Messtechnik GmbH Robert-Koch-Strasse 39 D-55129 Mainz
Project: PBA-C-08	Department : F&E Author: T. Jacobus
12.08.2015 / PCB-No.: 1447.1	Revision : 001 / Sheet 22 of 24

Confidential information and property of PHYTEC Messtechnik GmbH.
No part of these materials may be copied, used or disclosed except
with written permission of PHYTEC Messtechnik GmbH.

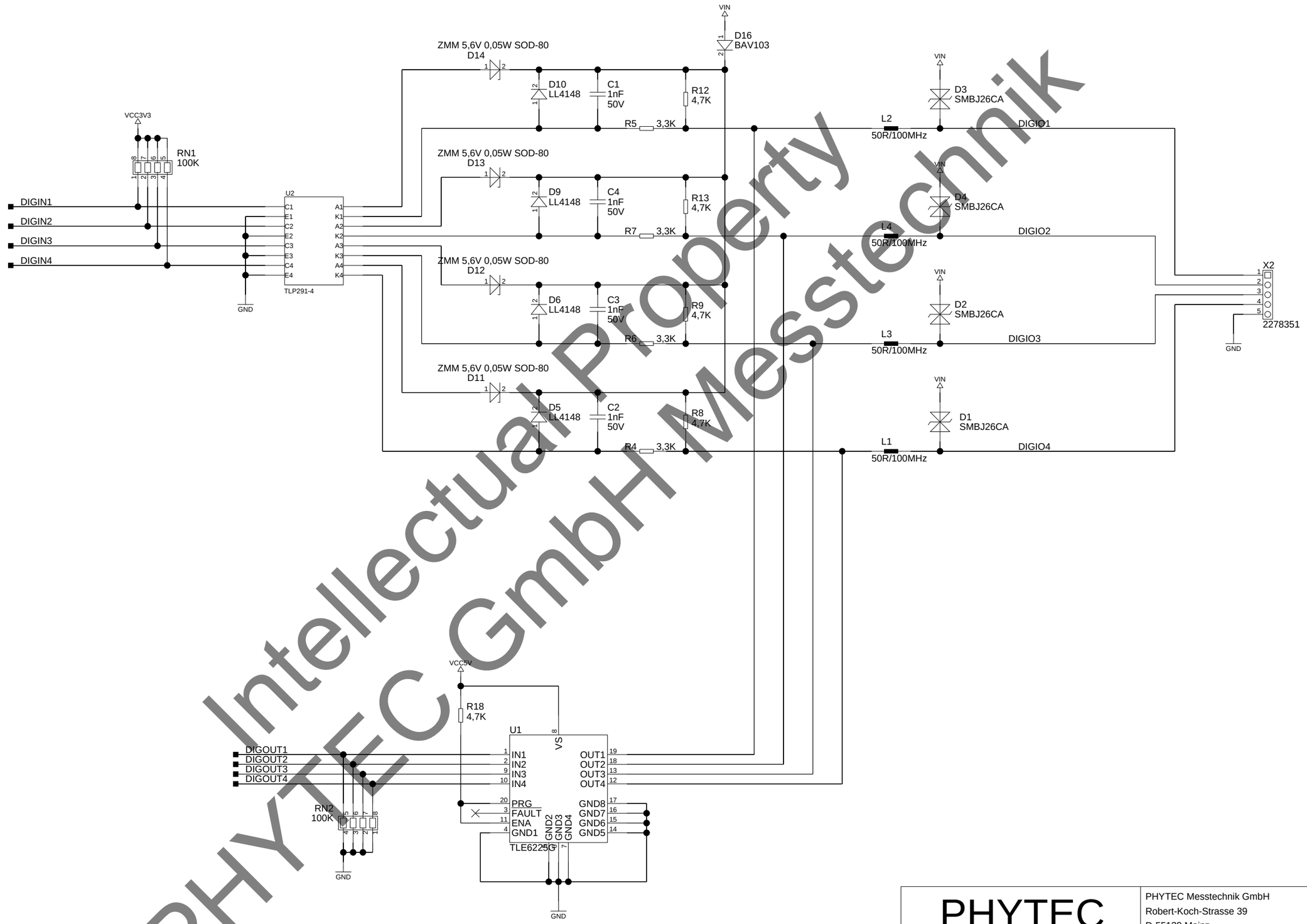

Intellectual Property
PHYTEC GmbH Messtechnik

PHYTEC	PHYTEC Messtechnik GmbH Robert-Koch-Strasse 39 D-55129 Mainz
Project: PBA-C-08	Department : F&E Author: T. Jacobus
12.08.2015 / PCB-No.: 1447.1	Revision : 001 / Sheet 23 of 24

Confidential information and property of PHYTEC Messtechnik GmbH.
No part of these materials may be copied, used or disclosed except
with written permission of PHYTEC Messtechnik GmbH.

Expansion Connector

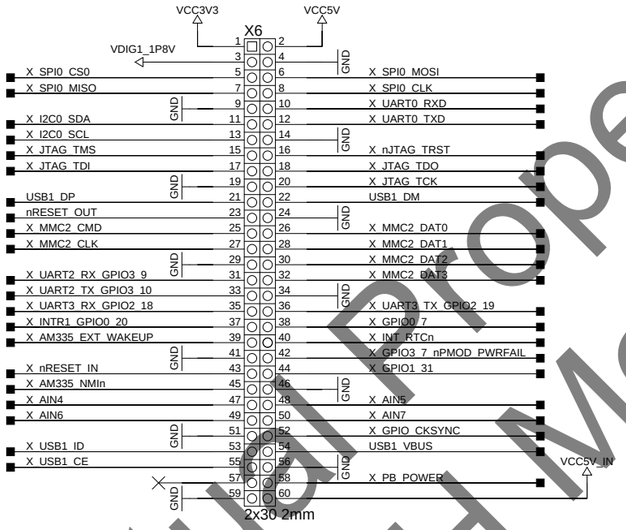

Cardedge Connector

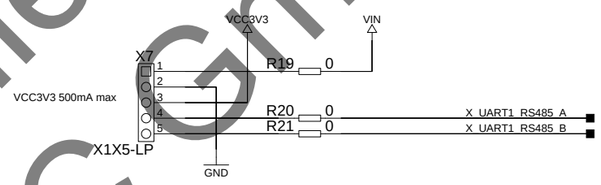

X8
X1X1-LP

Intellectual Property
PHYTEC GmbH Messtechnik

PHYTEC		PHYTEC Messtechnik GmbH Robert-Koch-Strasse 39 D-55129 Mainz	
Project: PBA-C-08		Department : F&E Author: T. Jacobus	
12.08.2015	PCB-No.: 1447.1	Revision : 001	Sheet 24 of 24